FSP-D40

Solar DC Surge Protective Device (DC SPD)

FEEO ELECTRIC

RoHS

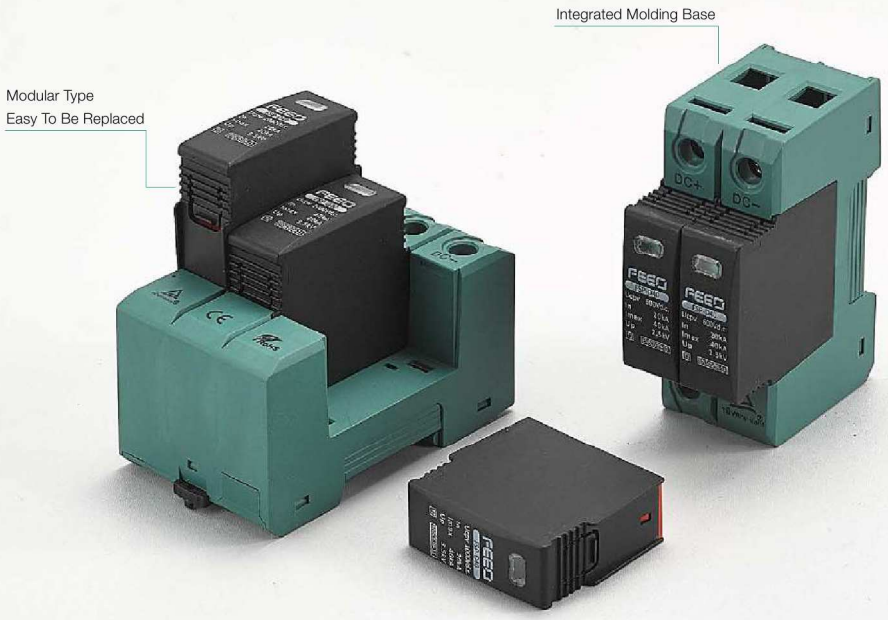

FSP-D40

FEEO

Type2 Solar DC Surge Protective Device (DC SPD)

Application

Surge protective device, protect against lightning surge voltages in solar system (photovoltaic power supply system). These units must be installed in parallel on the dc networks to be protected and provide common and different modes protection. Its installed location are recommended at both ends of the dc power supply line (solar panel side and inverter/converter side), especially if the line routing is external and long. High energy MOVs equipped with specific thermal disconnectors and related failure indicators.

Specifications

FSP-D40 Surge protector	FSP-D40				
PVDC - specific	EN50539-11				
Pole	2P	2P	3P	3P	2P(COSTOMIZED)
Electrical parameter					
Classified test	II	II	II	II	II
Uoc max (VDC)	600	800	1000	1500	12/24
Uc (VDC)	600	800	1000	1500	12/24
In (8 /20)us (kA)	20	20	20	20	20
Ima x (8 /20)us (kA)	40	40	40	40	40
Up (kV)	2.0	2.5	3.8	5.3	2.0

Remote Signal Contact

Remote signal contact	Maximum working voltage (V)	250VAC/30VDC	250VAC /30VDC
	Maximum working current (A) IA (250 V /AC)	IA (250V/AC)	IA (250V /AC)
	I A (30 V DC)	IA (30V/AC)	IA (30V /AC)

Installation and Dimensions

Wiring capacity(mm2)	Hard wire	4~25	4~25
	Flexible wire	4~16	4~16
Stripping length(mm)		10	10
Terminals crcwa		M5	M5
Torque (Nm)	Main circuit	3.5	3.5
	Remote signal contact	0.25	0.25
Protection class	All profile	IP40	IP40
	Connection port	IP20	IP20
Installation environment		No obvious shock and vibration	
Altitude (m)		≤2000	≤2000
Working Temperature		-30℃ ~ +70℃	-30℃ ~ +70℃
Relative humidity		30%~90 %	30%~90 %
How to install		Installed with H 35-7.5/DIN35 steel mounting rail	
Size (mm) (W x H x L)	W	36	54
	H	90	90
	L	67.6	67.6
Weight (kg)		0.24	0.36

FSP-D40

YUEQING FEEO ELECTRIC CO.,LTD

Type2 Solar DC Surge Protective Device (DC SPD)

▶ Wiring Diagram

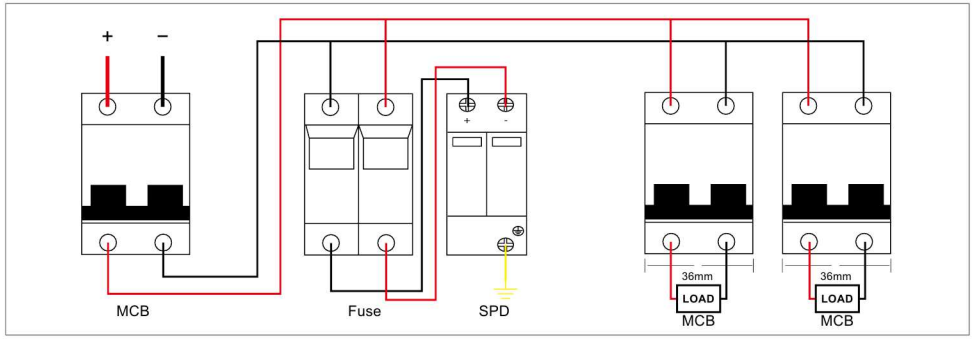

▶ Dimensions

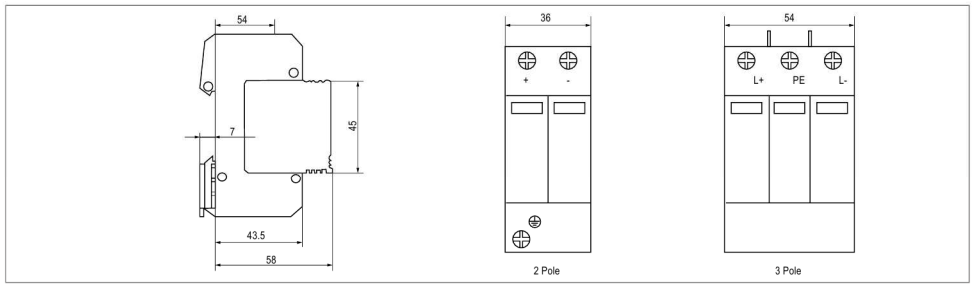

▶ Drawing

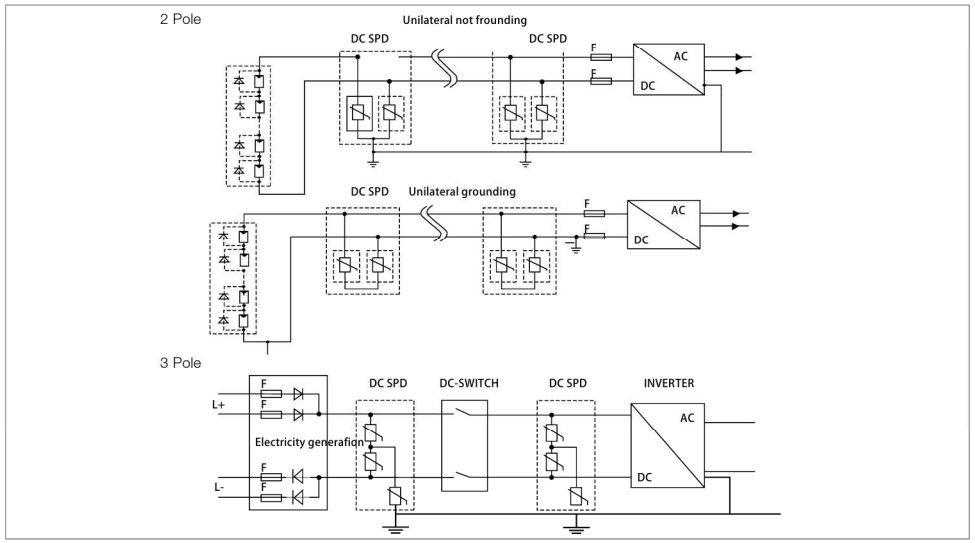

FSP-D40

Type 1+2 DC Surge Protective Device

▶ Application

FSP-D40 is a Type 1+2 surge protector specially designed for photovoltaic power generation, it is installed at the outlet of photovoltaic panels with high risk of direct lightning strike, it is suitable for photovoltaic system protection with DC voltages of 1000V and 1500V.

▶ Features

- Type 1+2 surge protective device for Photovoltaic
- VG-Technology
- Up to 1500 Vdc
- No leakage, no operating currents
- Impulse currents Iimp/Itotal : 5/20μs & 10/350 us
- Common and Differential Mode protection
- Plug-in modules
- Remote Signaling (option)
- EN 50539-11 compliance

▶ Specifications

Model		FSP-D40		
Description		Type 1+2 PV DC surge protector		
Pole		2P	3P	3P
Protection mode		CM/DM		
Max. operating voltage	Ucpv	600 Vdc	1000 Vdc	1500 Vdc
Current withstand short-circuit	Iscpv	1000 A		
Operating current - to the voltage Ucpv	Icpv	none		
Leakage current - to the voltage Ucpv	Ipe	none		
Follow current	If	none		
Nominal discharge current - 8/20 us	In	20 KA		
Max discharge current by pole - 8/20 us	Imax	40 KA		
Max. Lightning current by pole - 10/350 us	Iimp	5 KA/12.5KA		
Total lightning current - 10/350 us	Itotal	10 KA		
Total Maximal discharge current - 8/20 us	Itotal	60 KA		
Protection level CM/DM (at In)	Up	2.8 KV	3.5 KV	5.1 KV

FSP-D40

Type 1+2 DC Surge Protective Device

YUEQING FEEO
ELECTRIC CO.,LTD

Mechanical characteristics	
Dimensions	See diagram
Connection	Screw terminal for 2.5-25 mm2 wire
Disconnection indic ator	1 mechanical indicator by pole
Remote signaling	Option FSP-D40 - Output on changeover contact
Mounting	Symmetrical rail 35 mm (EN60715)
Operating temperature	-40℃ ~+85℃
Protection class	IP20
Housing material	Thermoplastic UL94-V0
Standards compliance	EN50539-11

▶ Dimensions

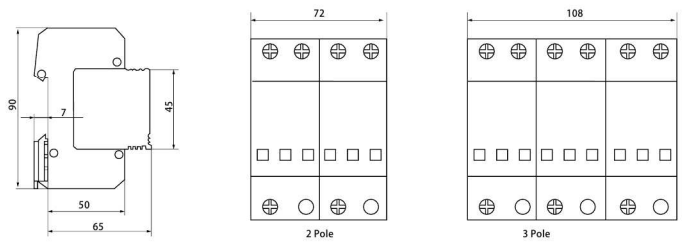

▶ Wiring Diagram

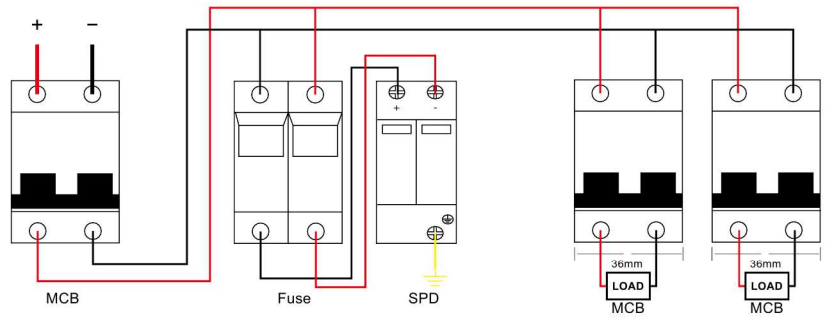

FEEO ELECTRIC

FDS series ▶▶

Solar DC Fuse

CCC CE TÜV RoHS